Boilers & Fired Systems

Clean Coal Technology

What is a Boiler?

- Vessel that heats water to become hot water or steam
- At atmospheric pressure water volume increases 1,600 times
- Hot water or steam used to transfer heat to a process
- The larger the heating surface a boiler has, the more efficient it becomes

Boilers

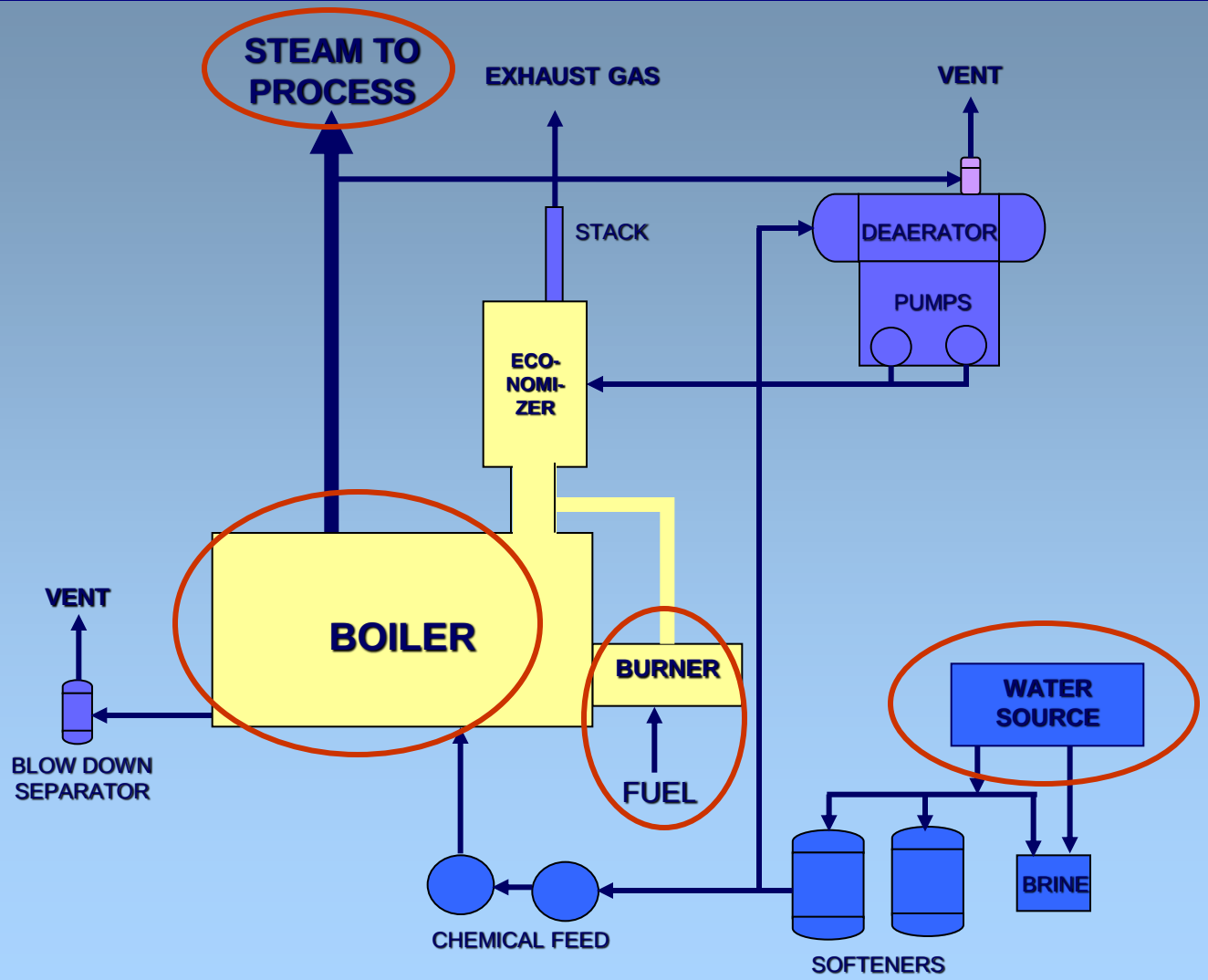

Figure: Schematic overview of a boiler room

Types of Boilers

1. Fire Tube Boiler
2. Water Tube Boiler
3. Packaged Boiler
4. Fluidized Bed (FBC) Boiler
5. Stoker Fired Boiler
6. Pulverized Fuel Boiler
7. Waste Heat Boiler

Fire Tube Boiler

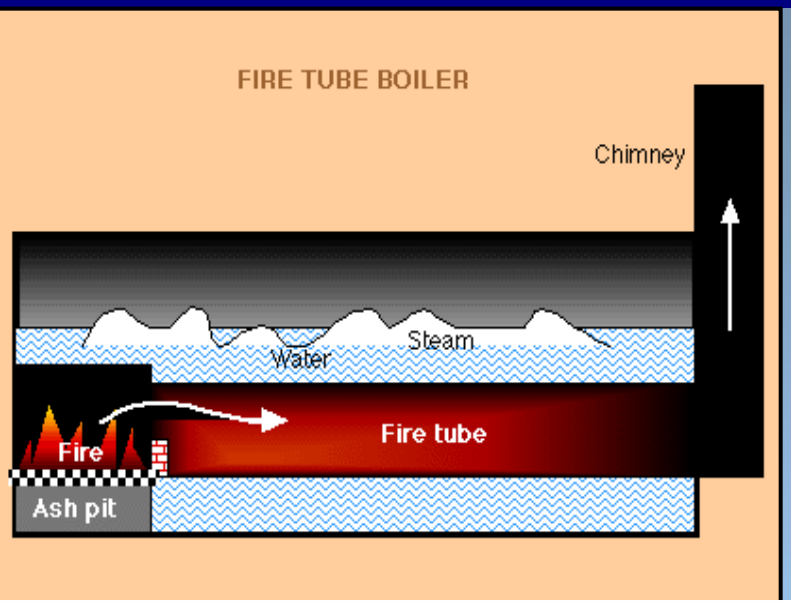

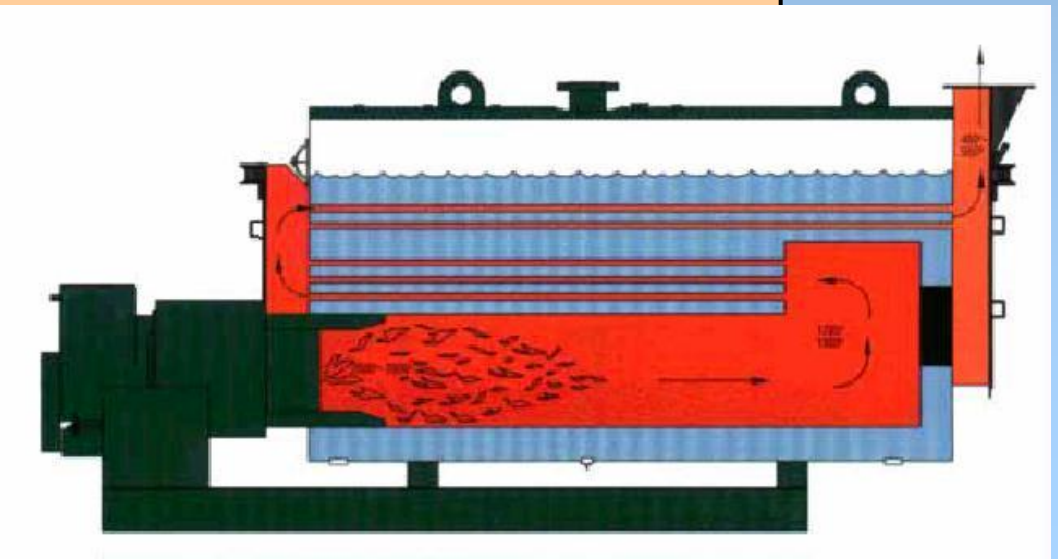

- Lower initial cost
- More fuel efficient
- Relatively small steam capacities (12,000 kg/hour)
- Low to medium steam pressures (18 kg/cm^2)
- Operates with oil, gas or solid fuels

Water Tube Boiler

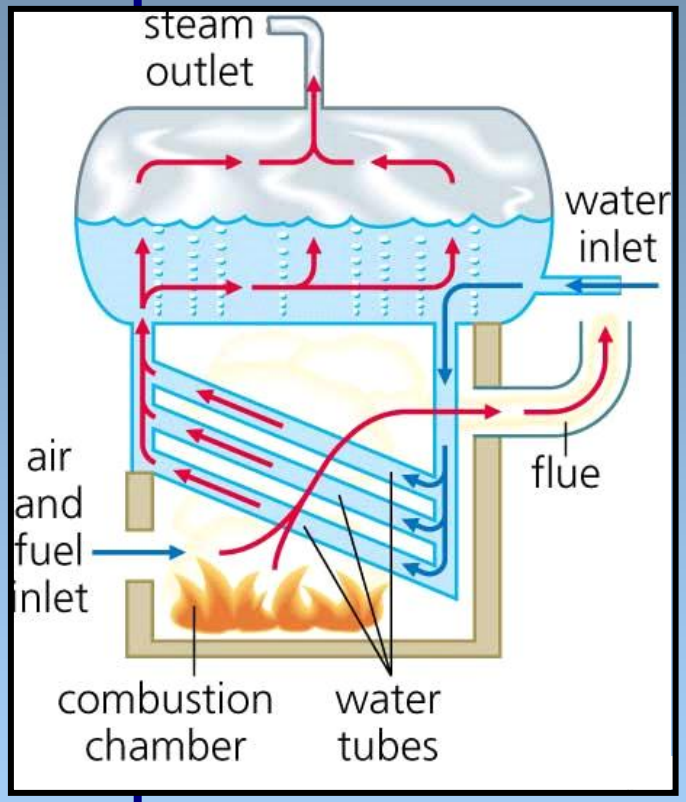

- **Used for high steam demand and pressure requirements**
- **Capacity range of 4,500 – 120,000 kg/hour**
- **Combustion efficiency enhanced by induced draft provisions**
- **Lower tolerance for water quality and needs water treatment plant**

Packaged Boiler

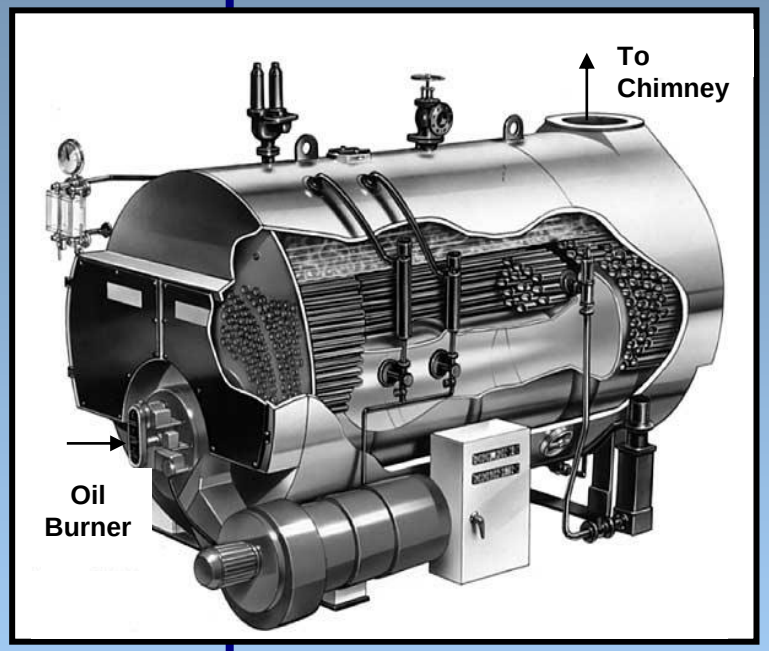

- Comes in complete package
- Features
  - High heat transfer
  - Faster evaporation
  - Good convective heat transfer
  - Good combustion efficiency
  - High thermal efficiency
- Classified based on number of passes

Fluidized Bed Combustion (FBC) Boiler

- **Particles are suspended in high velocity air stream: *bubbling fluidized bed***
- **Combustion at 840° – 950° C**
- **Capacity range 0.5 T/hr to 100 T/hr**
- **Fuels: coal, washery rejects, rice husk, bagasse and agricultural wastes**
- **Benefits: compactness, fuel flexibility, higher combustion efficiency, reduced SOx & NOx**

Atmospheric Fluidized Bed Combustion (AFBC) Boiler

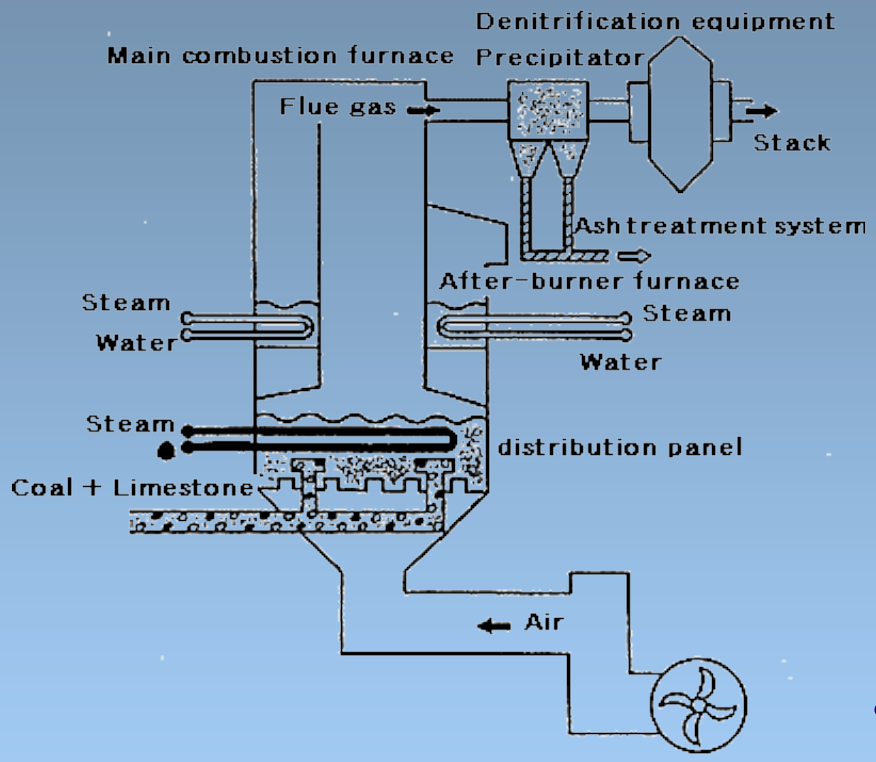

- Most common FBC boiler that uses preheated atmospheric air as fluidization and combustion air

Pressurized Fluidized Bed Combustion (PFBC) Boiler

- Compressor supplies the forced draft and combustor is a pressure vessel
- Used for cogeneration or combined cycle power generation

Type of FBC Boilers

Atmospheric Circulating Fluidized Bed Combustion (CFBC) Boiler

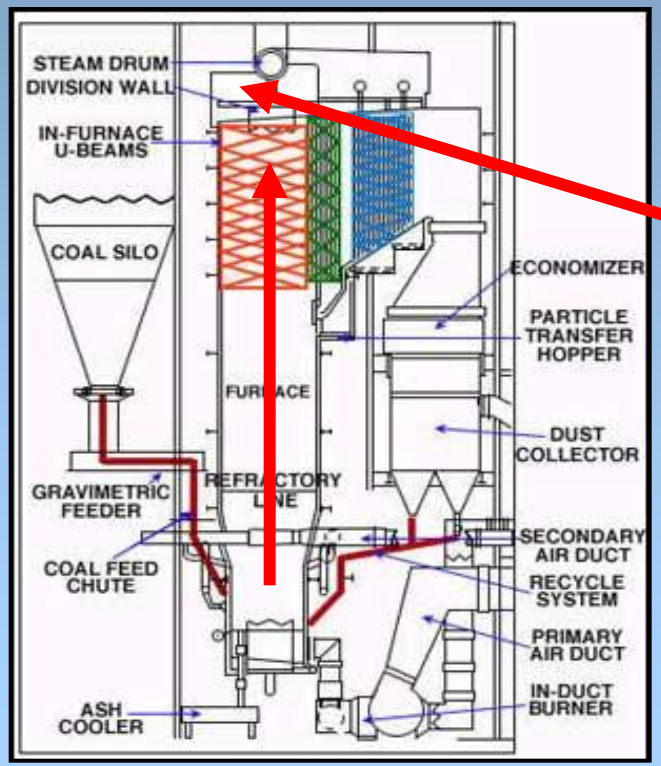

- **Solids lifted from bed, rise, return to bed**
- **Steam generation in convection section**
- **Benefits: more economical, better space utilization and efficient combustion**

(Thermax Babcock & Wilcox Ltd, 2001)

Stoke Fired Boilers

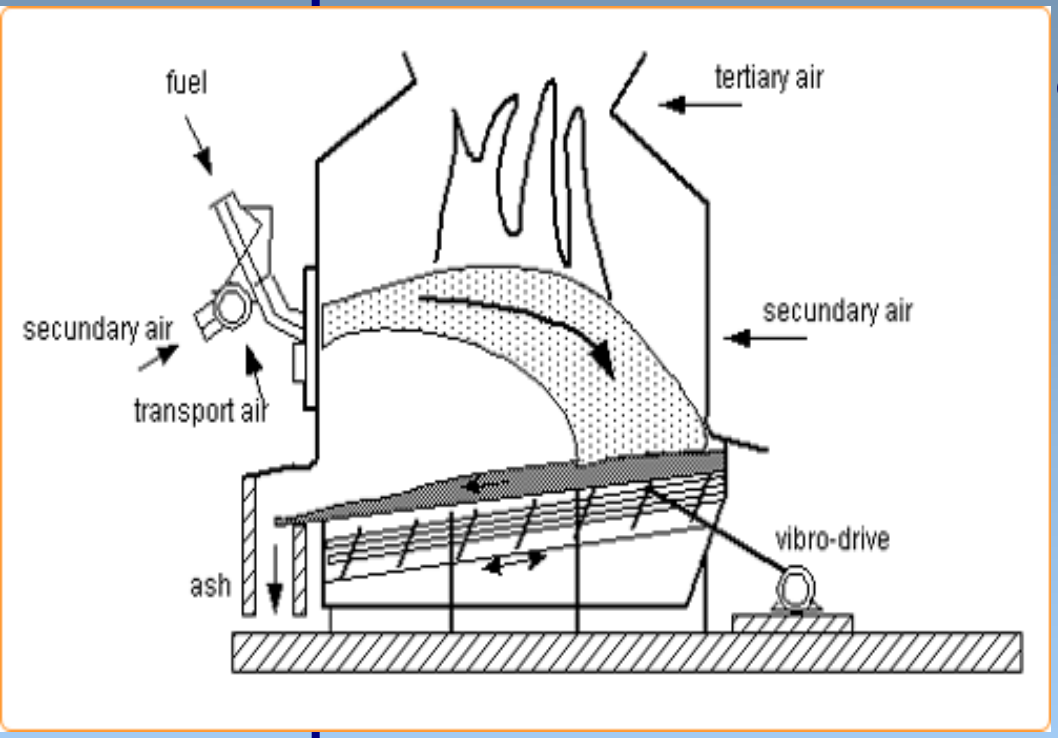

a) Spreader stokers

- Coal is first burnt in suspension then in coal bed
- Flexibility to meet load fluctuations
- Favored in many industrial applications

Stoke Fired Boilers

b) Chain-grate or traveling-grate stoker

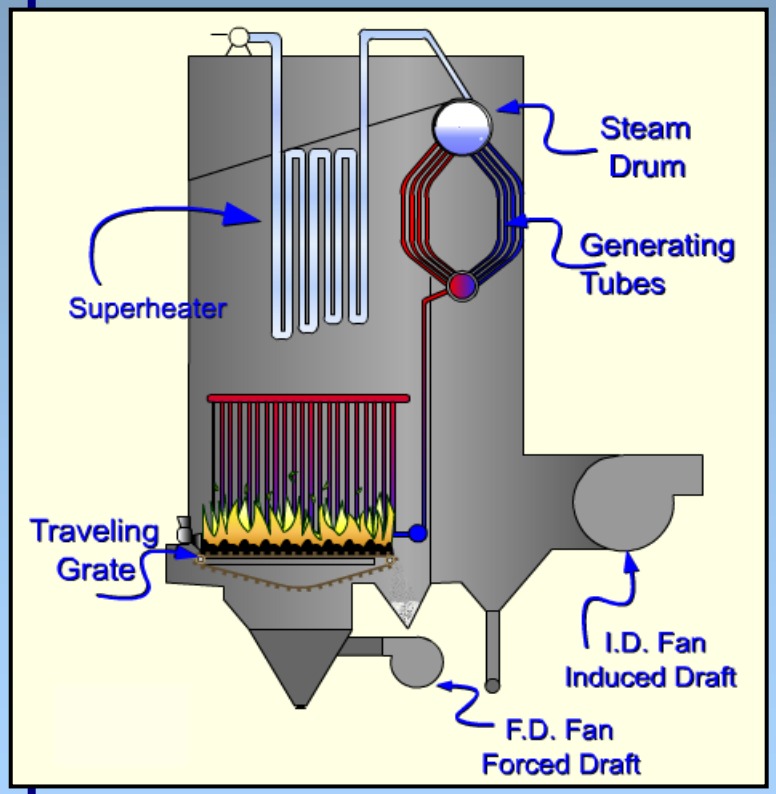

(University of Missouri, 2004)

- Coal is burnt on moving steel grate
- Coal gate controls coal feeding rate
- Uniform coal size for complete combustion

Pulverized Fuel Boiler

- Pulverized coal powder blown with combustion air into boiler through burner nozzles
- Combustion temperature at 1300 - 1700 °C
- Benefits: varying coal quality coal, quick response to load changes and high pre-heat air temperatures

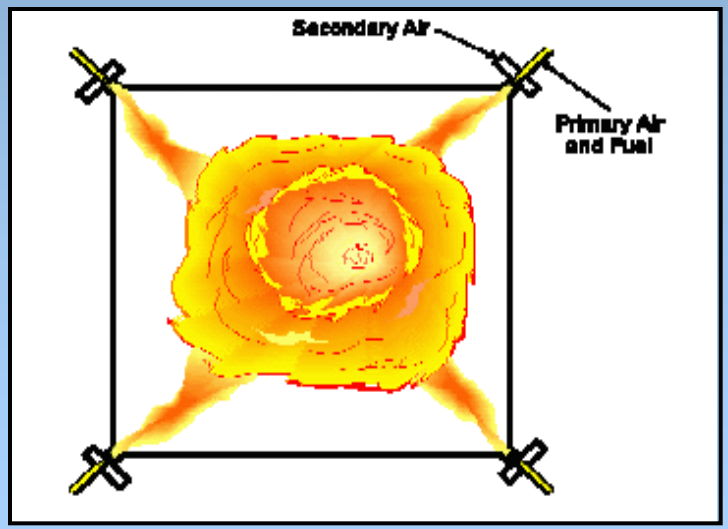

Tangential firing

Waste Heat Boiler

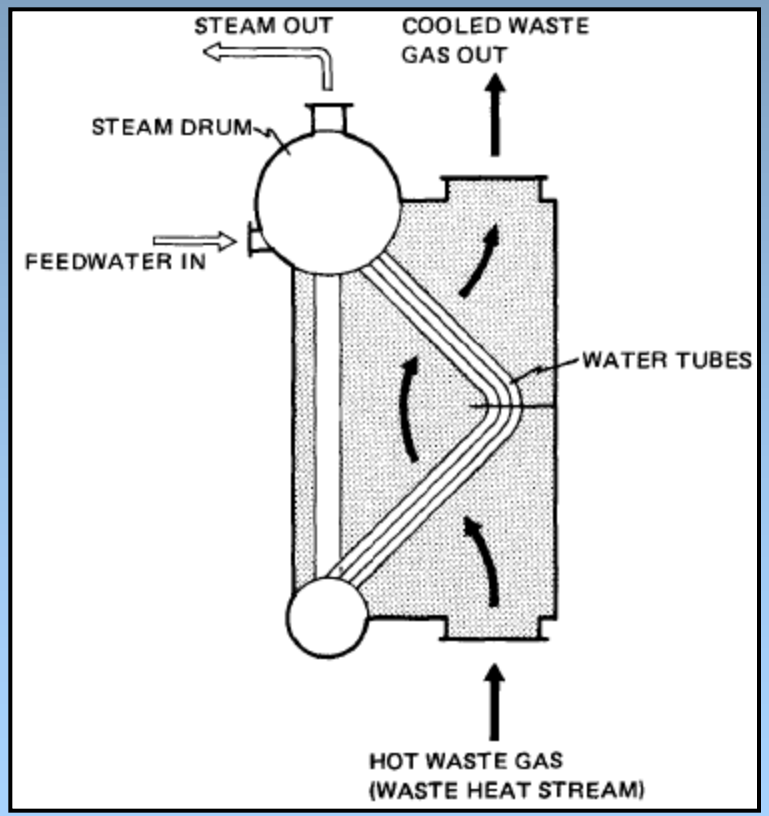

Agriculture and Agri-Food Canada, 2001

- **Used when waste heat available at medium/high temp**
- **Auxiliary fuel burners used if steam demand is more than the waste heat can generate**
- **Used in heat recovery from exhaust gases from gas turbines and diesel engines**

Thermic Fluid Heater

- Wide application for indirect process heating
- Thermic fluid (petroleum-based) is heat transfer medium
- Benefits:
  - Closed cycle = minimal losses
  - Non-pressurized system operation at 250 °C
  - Automatic controls = operational flexibility
  - Good thermal efficiencies

Thermic Fluid Heater

3. Heat transfer through heat exchanged

2. Circulated to user equipment

4. Fluid returned to heater

1. Thermic fluid heated in the heater

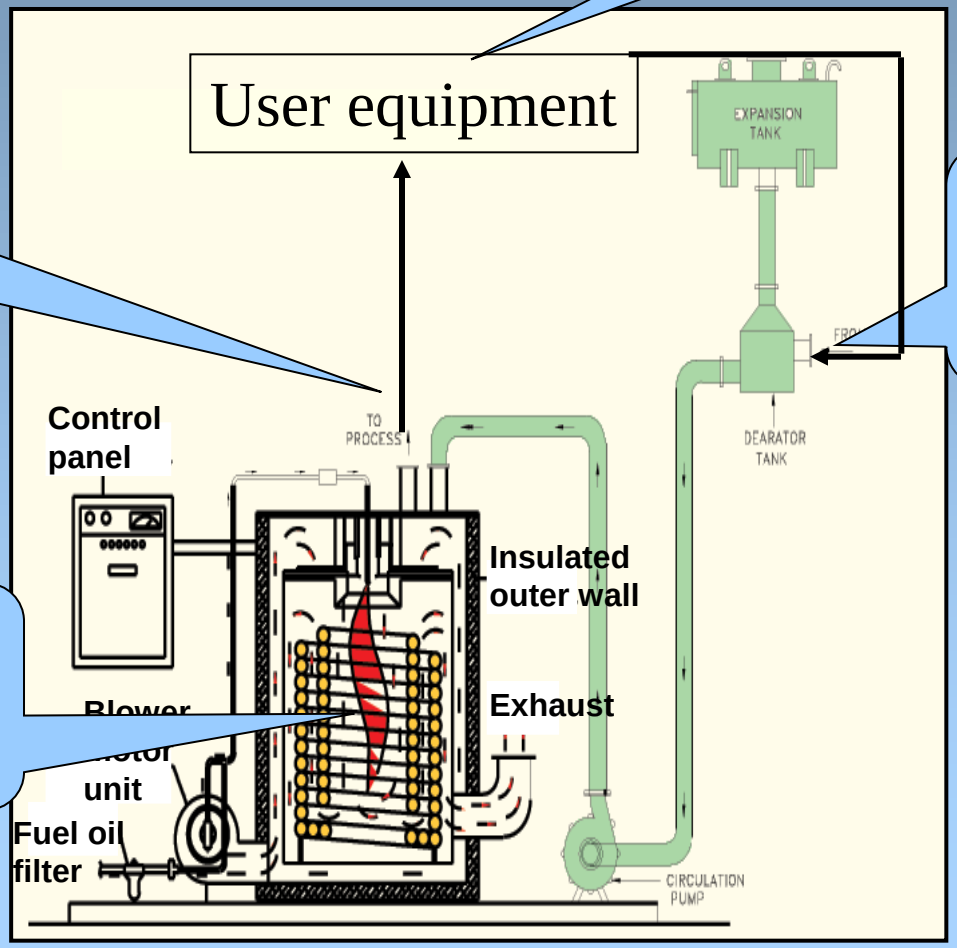

Assessment of a boiler

1. Boiler
2. Boiler blow down
3. Boiler feed water treatment

Boiler Performance

- **Causes of poor boiler performance**
  - -Poor combustion
  - -Heat transfer surface fouling
  - -Poor operation and maintenance
  - -Deteriorating fuel and water quality
- **Heat balance: identify heat losses**
- **Boiler efficiency: determine deviation from best efficiency**

Heat Balance

An energy flow diagram describes geographically how energy is transformed from fuel into useful energy, heat and losses

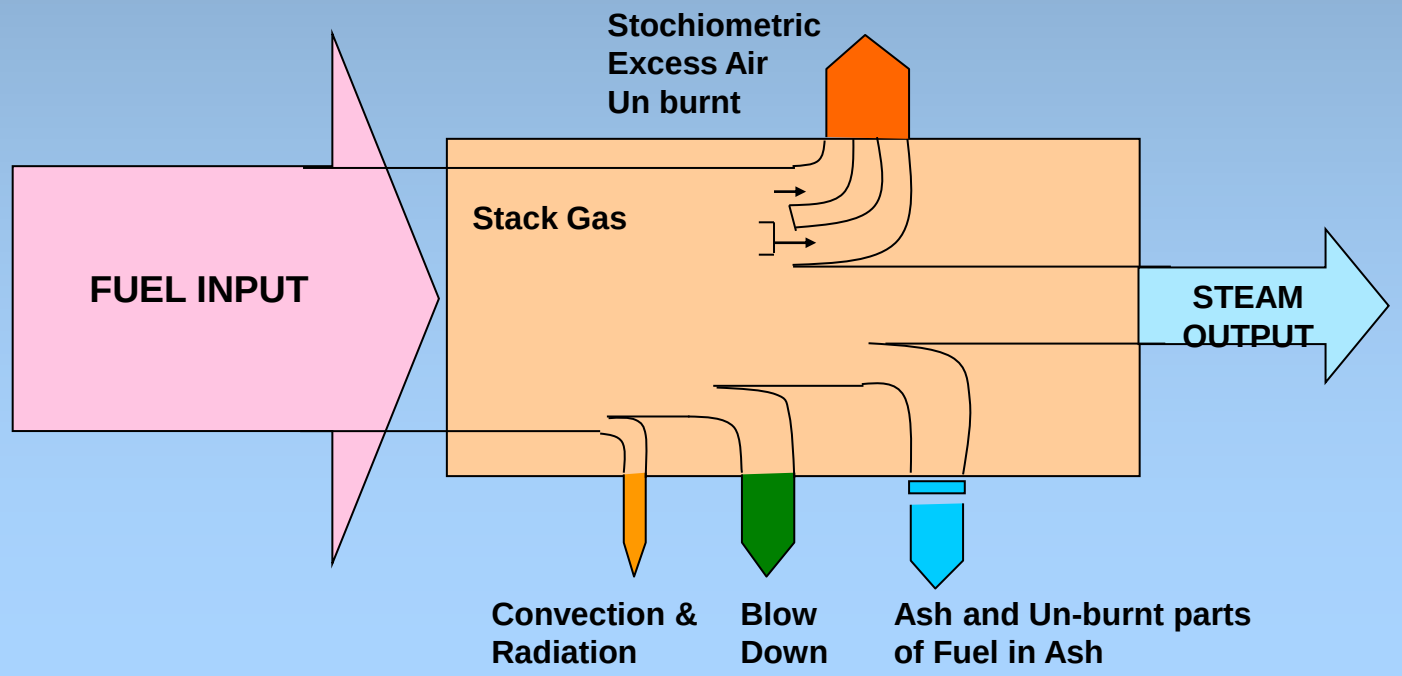

Assessment of a Boiler

Heat Balance

Balancing total energy entering a boiler against the energy that leaves the boiler in different forms

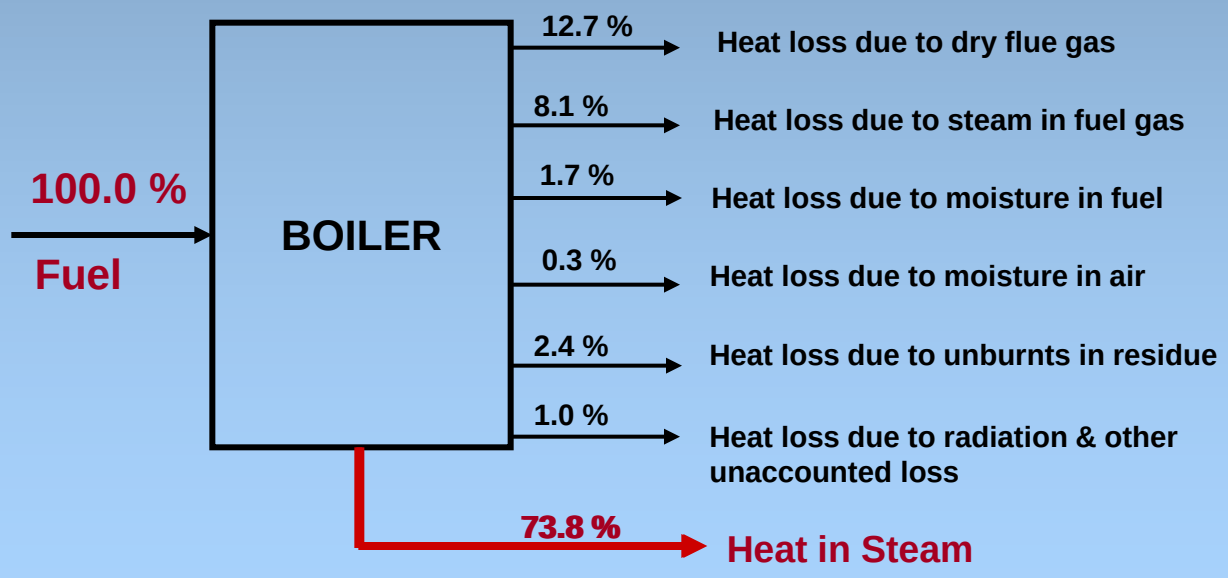

Heat Balance

Goal: improve energy efficiency by reducing *avoidable* losses

Avoidable losses include:

- **Stack gas losses (excess air, stack gas temperature)**
- **Losses by unburnt fuel**
- **Blow down losses**
- **Condensate losses**
- **Convection and Radiation**

Boiler Efficiency

Thermal efficiency: % of (heat) energy input that is effectively useful in the generated steam

BOILER EFFICENCY CALCULATION

1) DIRECT METHOD:

The energy gain of the working fluid (water and steam) is compared with the energy content of the boiler fuel.

2) INDIRECT METHOD:

The efficiency is the difference between losses and energy input

Boiler Efficiency: Direct Method

$$\text{Boiler efficiency } (\eta) = \frac{\text{Heat Output}}{\text{Heat input}} \times 100 = \frac{Q \times (hg - hf)}{q \times GCV} \times 100$$

h_g -the enthalpy of saturated steam in kcal/kg of steam

h_f -the enthalpy of feed water in kcal/kg of water

Parameters to be monitored:

- Quantity of steam generated per hour (Q) in kg/hr
- Quantity of fuel used per hour (q) in kg/hr
- The working pressure (in kg/cm^2(g)) and superheat temperature (°C), if any
- The temperature of feed water (°C)
- Type of fuel and gross calorific value of the fuel (GCV) in kcal/kg of fuel

Boiler Efficiency: Direct Method

Advantages

- Quick evaluation
- Few parameters for computation
- Few monitoring instruments
- Easy to compare evaporation ratios with benchmark figures

Disadvantages

- No explanation of low efficiency
- Various losses not calculated

Boiler Efficiency: Indirect Method

Efficiency of boiler (η) = 100 – (i+ii+iii+iv+v+vi+vii)

Principle losses:

i) Dry flue gas

ii) Evaporation of water formed due to H_2 in fuel

iii) Evaporation of moisture in fuel

iv) Moisture present in combustion air

v) Unburnt fuel in fly ash

vi) Unburnt fuel in bottom ash

vii) Radiation and other unaccounted losses

Boiler Efficiency: Indirect Method

Required calculation data

- Ultimate analysis of fuel (H_2, O_2, S, C, moisture content, ash content)
- % oxygen or CO_2 in the flue gas
- Fuel gas temperature in ◦C (T_f)
- Ambient temperature in ◦C (Ta) and humidity of air in kg/kg of dry air
- GCV of fuel in kcal/kg
- % combustible in ash (in case of solid fuels)
- GCV of ash in kcal/kg (in case of solid fuels)

Boiler Efficiency: Indirect Method

Advantages

- Complete mass and energy balance for each individual stream
- Makes it easier to identify options to improve boiler efficiency

Disadvantages

- Time consuming
- Requires lab facilities for analysis

Boiler Blow Down

- Controls ‘total dissolved solids’ (TDS) in the water that is boiled
- Blows off water and replaces it with feed water
- Conductivity measured as indication of TDS levels
- Calculation of quantity blow down required:

$$\text{Blow down (\%)} = \frac{\text{Feed water TDS x Make up water x 100}}{\text{Maximum Permissible TDS in Boiler water}}$$

Boiler Blow Down

Two types of blow down

- **Intermittent**
  - Manually operated valve reduces TDS
  - Large short-term increases in feed water
  - Substantial heat loss
- **Continuous**
  - Ensures constant TDS and steam purity
  - Heat lost can be recovered
  - Common in high-pressure boilers

Boiler Blow Down

Benefits

- **Lower pretreatment costs**
- **Less make-up water consumption**
- **Reduced maintenance downtime**
- **Increased boiler life**
- **Lower consumption of treatment chemicals**

Boiler Feed Water Treatment

- **Quality of steam depend on water treatment;to control**
  - **Steam purity**
  - **Deposits**
  - **Corrosion**
- **Efficient heat transfer only if ???**

boiler water is free from deposit-forming solids

Assessment of a Boiler

Boiler Feed Water Treatment

Deposit control

- To avoid efficiency losses and reduced heat transfer
- Hardness salts of calcium and magnesium
  - Alkaline hardness: removed by boiling
  - Non-alkaline: difficult to remove
- Silica forms hard silica scales

Boiler Feed Water Treatment

Internal water treatment

- Chemicals added to boiler to prevent scale
- Different chemicals for different water types
- Limitation:
  - Feed water is low in hardness salts
  - Low pressure, high TDS content is tolerated
  - Small water quantities treated
- Internal treatment alone not recommended

Boiler Feed Water Treatment

External water treatment:

- Removal of suspended/dissolved solids and dissolved gases
- Pre-treatment: sedimentation and settling
- First treatment stage: removal of salts
- Processes
  a) Ion exchange
  b) Demineralization
  c) De-aeration
  d) Reverse osmoses

External Water Treatment

a) Ion-exchange process (softener plant)

- Water passes through bed of natural zeolite of synthetic resin to remove hardness
- Base exchange: calcium (Ca) and magnesium (Mg) replaced with sodium (Na) ions
- Does not reduce TDS, blow down quantity and alkalinity

b) Demineralization

- Complete removal of salts
- Cations in raw water replaced with hydrogen ions

Assessment of a Boiler

External Water Treatment

c) De-aeration

- **Dissolved corrosive gases (O_2, CO_2) expelled by preheating the feed water**
- **Two types:**
  - ***Mechanical de-aeration***
  - ***Chemical de-aeration***

External Water Treatment

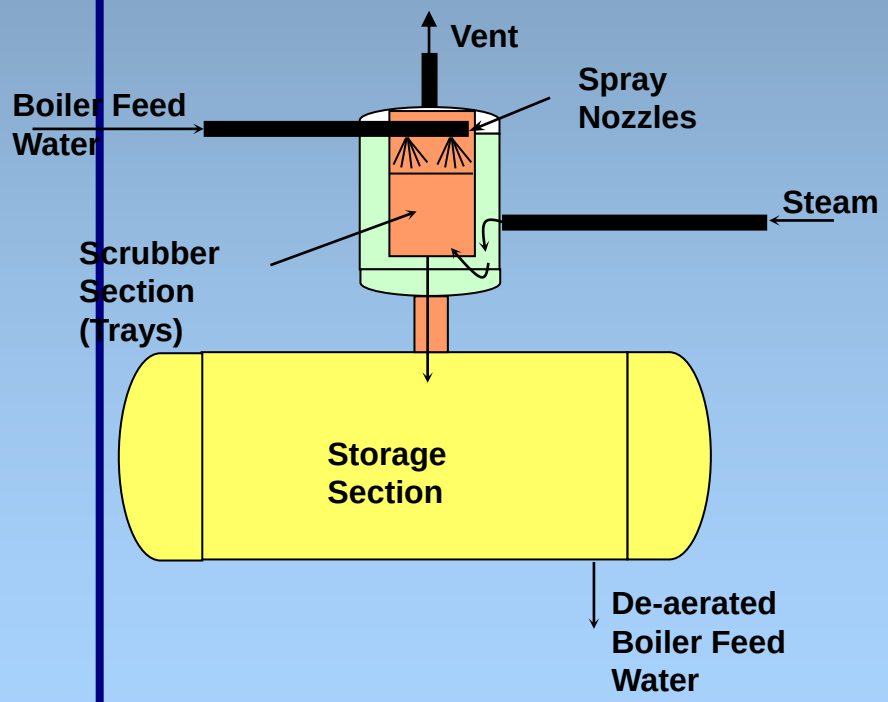

(National Productivity Council)

Mechanical de-aeration

- O_2 and CO_2 removed by heating feed water
- Economical treatment process
- Vacuum type can reduce O_2 to 0.02 mg/l
- Pressure type can reduce O_2 to 0.005 mg/l

External Water Treatment

Chemical de-aeration

- Removal of trace oxygen with scavenger
- Sodium sulphite:
  - Reacts with oxygen: sodium sulphate
  - Increases TDS: increased blow down
- Hydrazine
  - Reacts with oxygen: nitrogen + water
  - Does not increase TDS: used in high pressure boilers

Assessment of a Boiler

External Water Treatment

d) Reverse osmosis

- Separated by a semi-permeable membrane
- Higher concentrated liquid pressurized
- Water moves in reversed direction

Assessment of a Boiler

External water treatment

d) Reverse osmosis

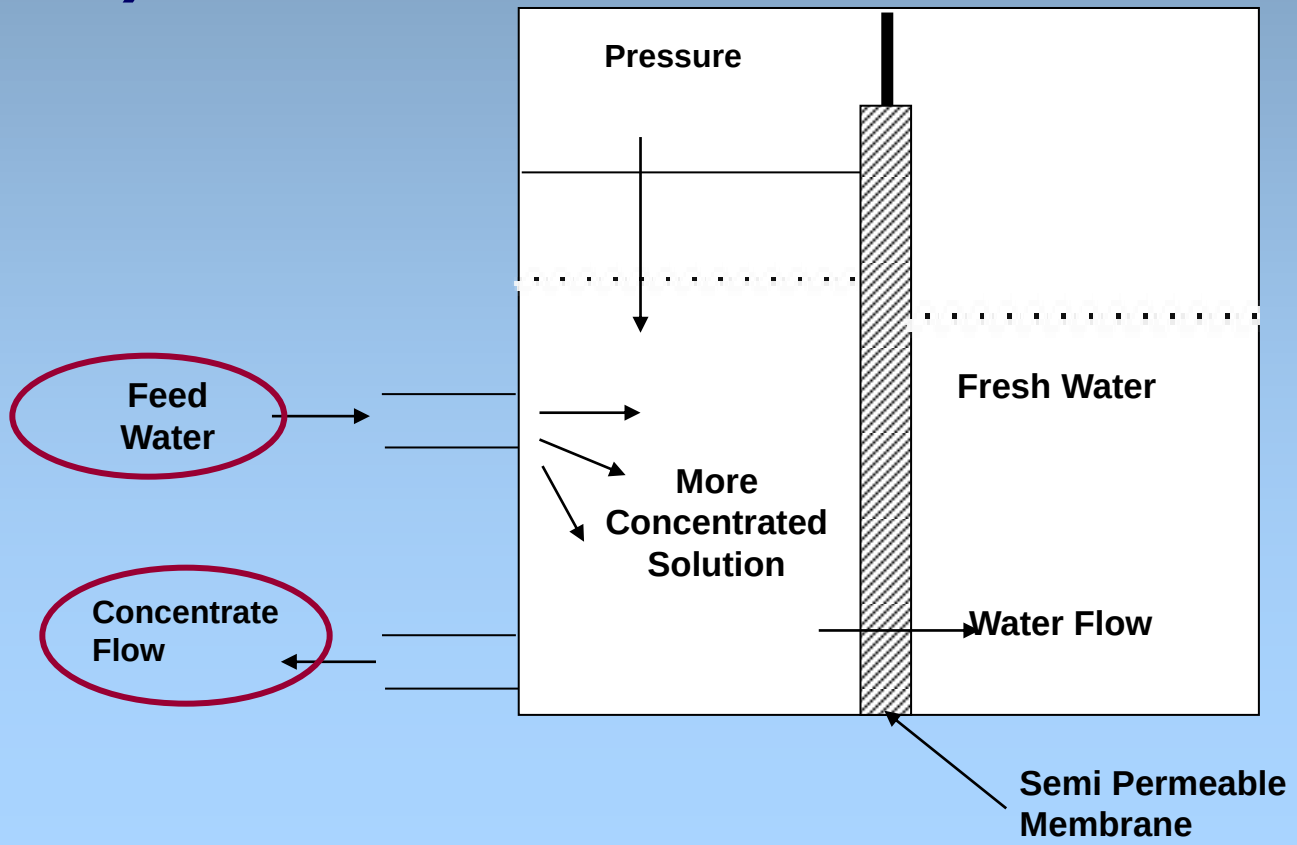

Energy Efficiency Opportunities

1. Stack Temperature Control

- Keep as low as possible
- If >200°C then recover waste heat

2. Feed Water Preheating Economizers

- Potential to recover heat from 200 – 300 ^{o}C flue gases leaving a modern 3-pass shell boiler

3. Combustion Air Preheating

- If combustion air raised by 20°C = 1% improve thermal efficiency

Energy Efficiency Opportunities

4. Minimize Incomplete Combustion

- **Symptoms:**
  - **Smoke, high CO levels in exit flue gas**
- **Causes:**
  - **Air shortage, fuel surplus, poor fuel distribution**
  - **Poor mixing of fuel and air**

Energy Efficiency Opportunities

5. Excess Air Control

- Excess air required for complete combustion
- Optimum excess air levels varies
- 1% excess air reduction = 0.6% efficiency rise
- Portable or continuous oxygen analyzers

Fuel	Kg air req./kg fuel	%CO_2 in flue gas in practice
Solid Fuels		
Bagasse	3.3	10-12
Coal (bituminous)	10.7	10-13
Lignite	8.5	9 -13
Paddy Husk	4.5	14-15
Wood	5.7	11.13
Liquid Fuels		
Furnace Oil	13.8	9-14
LSHS	14.1	9-14

Energy Efficiency Opportunities

6. Radiation and Convection Heat Loss Minimization

- Fixed heat loss from boiler shell, regardless of boiler output
- Repairing insulation can reduce loss

7. Automatic Blow Down Control

- Sense and respond to boiler water conductivity and pH

Energy Efficiency Opportunities

8. Scaling and Soot Loss Reduction

- Every 22°C increase in stack temperature = 1% efficiency loss
- 3 mm of soot = 2.5% fuel increase

9. Reduced Boiler Steam Pressure

- Lower steam pressure

  = lower saturated steam temperature

  = lower flue gas temperature
- Steam generation pressure dictated by process

Energy Efficiency Opportunities

10. Control Boiler Loading

- Maximum boiler efficiency: 65-85% of rated load
- Significant efficiency loss: < 25% of rated load

11. Proper Boiler Scheduling

- Optimum efficiency: 65-85% of full load
- Few boilers at high loads is more efficient than large number at low loads

Energy Efficiency Opportunities

12. Boiler Replacement

Financially attractive if existing boiler is

- **Old and inefficient**
- **Not capable of firing cheaper substitution fuel**
- **Over or under-sized for present requirements**
- **Not designed for ideal loading conditions**